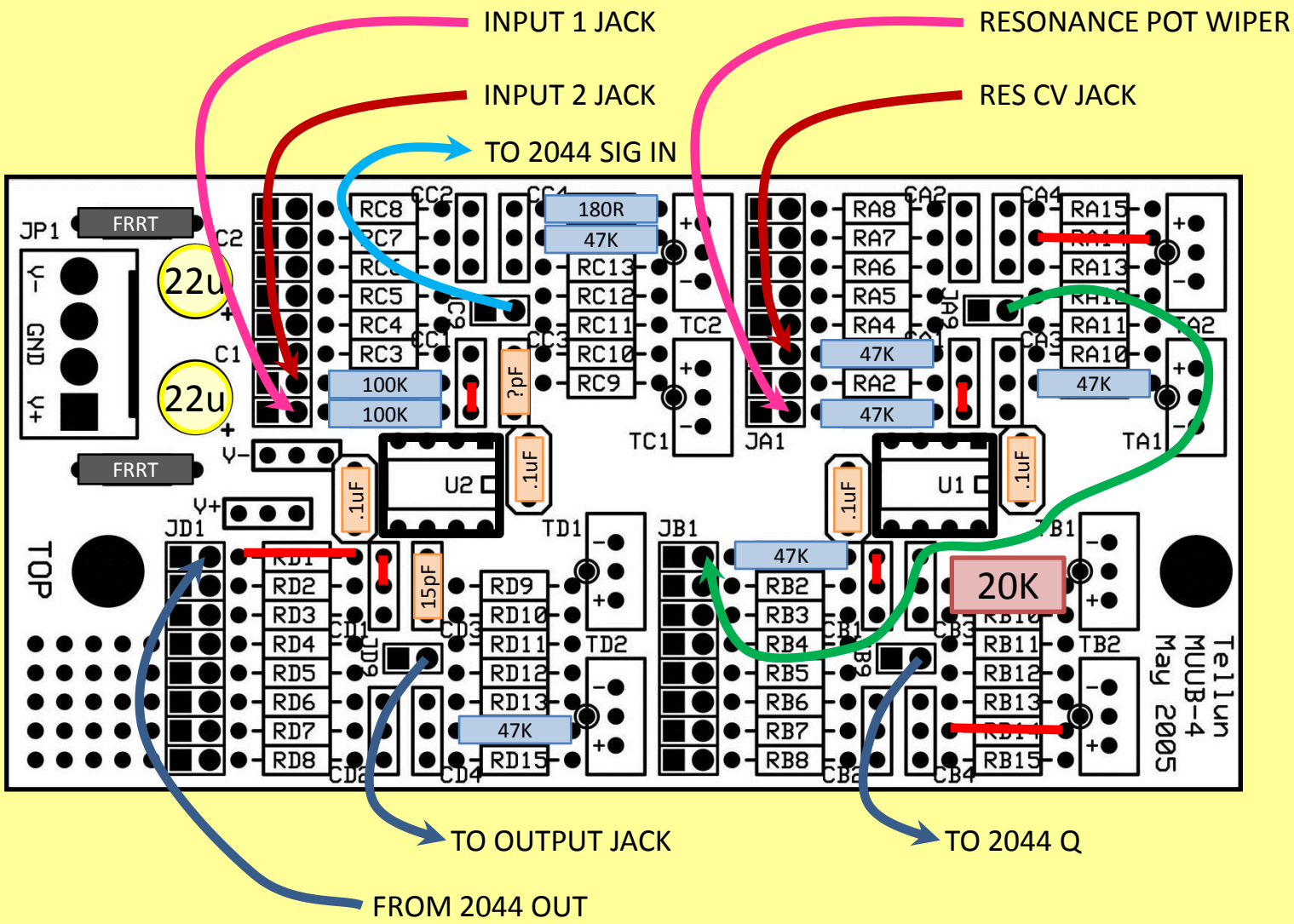
INPUT 1 JACK
RESONANCE POT WIPER
INPUT 2 JACK
RES CV JACK
TO 2044 SIG IN
TO OUTPUT JACK
TO 2044 Q
FROM 2044 OUT
JP1
FRRT
V-
GND
V+
22u
C1
C2
RC8
RC7
RC5
RC4
RC3
100K
100K
CC2
CC1
CC3
CC4
180R
47K
RC13
RC12
RC11
RC10
RC9
TC2
TC1
?pF
.1uF
U2
U1
JA1
RA8
RA7
RA6
RA5
RA4
RA2
47K
47K
CA2
CA1
CA3
CA4
RA15
RA13
RA11
RA10
47K
TA2
TA1
JD1
RD2
RD3
RD4
RD5
RD6
RD7
RD8
15pF
CD1
CD2
CD3
CD4
RD9
RD10
RD11
RD12
RD13
47K
RD15
TD1
TD2
JB1
47K
RB2
RB3
RB4
RB5
RB6
RB7
RB8
CB1
CB2
CB3
CB4
RB11
RB12
RB13
RB15
TB1
TB2
20K
TOP
Tellun
MUUB-4
May 2005