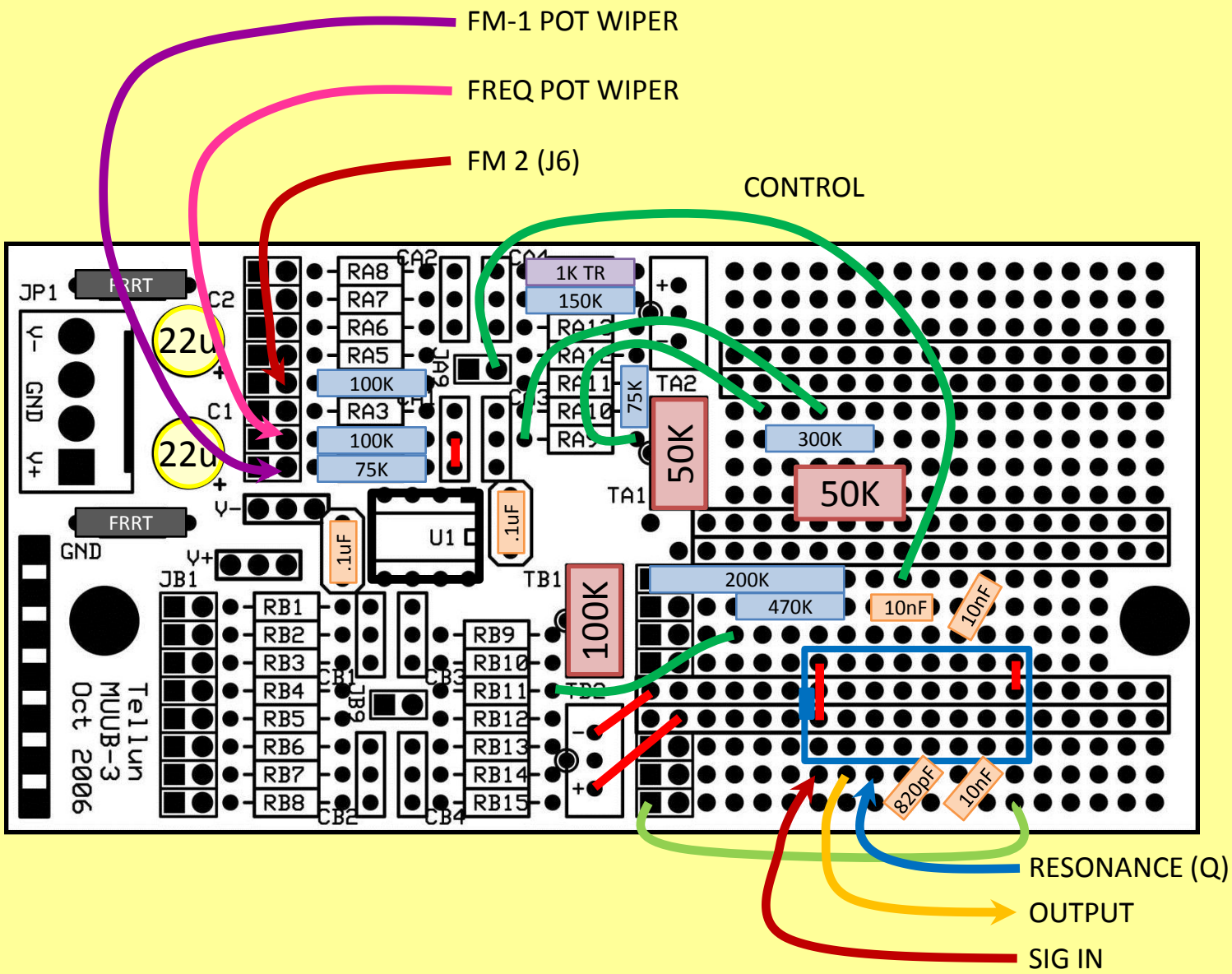
FM-1 POT WIPER
FREQ POT WIPER
FM 2 (J6)
CONTROL
RESONANCE (Q)
OUTPUT
SIG IN
JP1
FRRT
V-
GND
V+
C2
22u
C1
22u
RA8
RA7
RA6
RA5
100K
RA3
100K
75K
CA2
CA1
1K TR
150K
RA12
RA11
RA10
RA9
75K
TA2
50K
300K
50K
TA1
.1uF
U1
.1uF
TB1
100K
200K
470K
10nF
10nF
820pF
10nF
JB1
RB1
RB2
RB3
RB4
RB5
RB6
RB7
RB8
RB9
RB10
RB11
RB12
RB13
RB14
RB15
CB1
CB2
CB3
CB4
Tellun
MUUB-3
Oct 2006