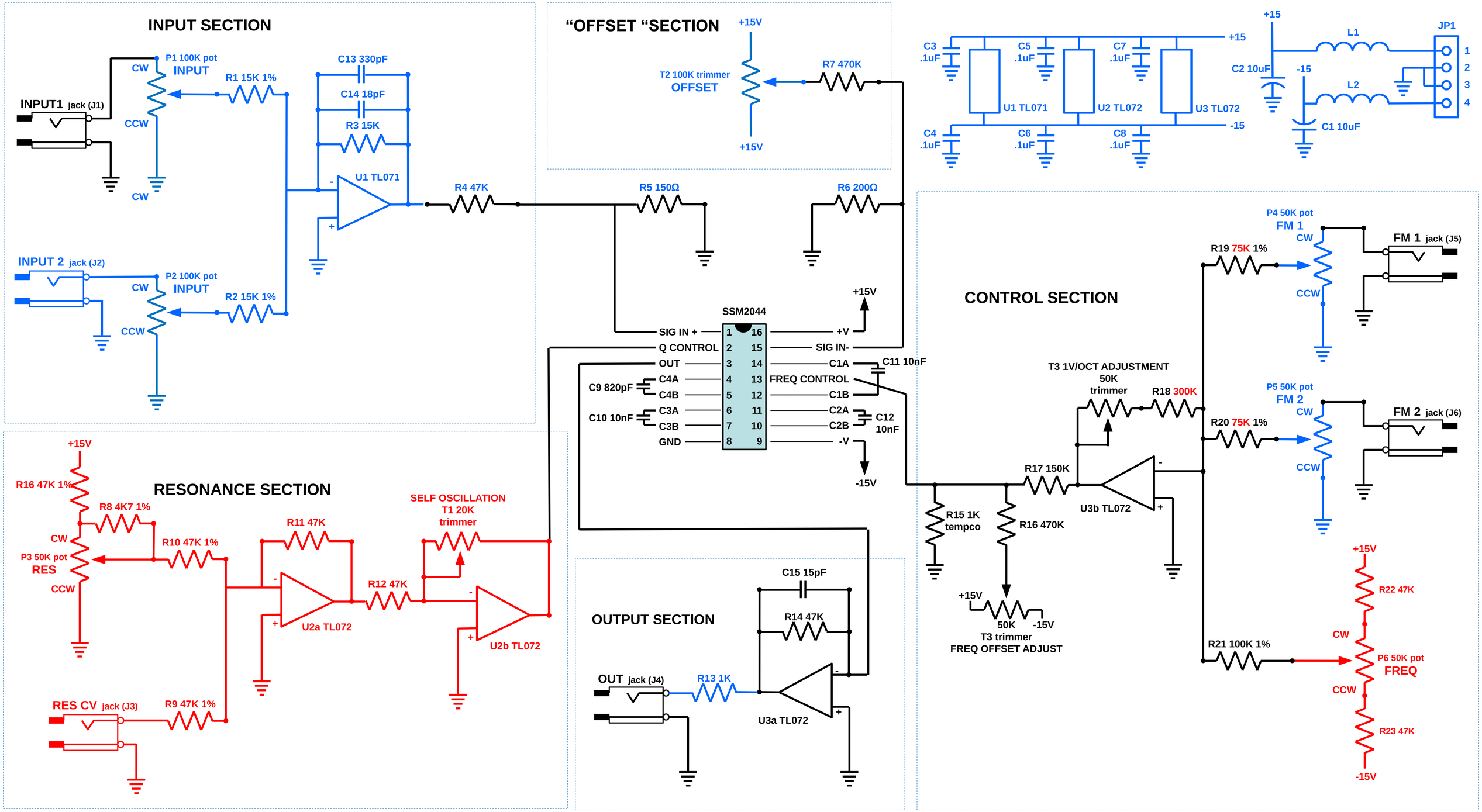
INPUT SECTION
INPUT1 jack (J1)
P1 100K pot
INPUT
CW
CCW
R1 15K 1%
C13 330pF
C14 18pF
R3 15K
U1 TL071
R4 47K
INPUT 2 jack (J2)
P2 100K pot
INPUT
R2 15K 1%
"OFFSET "SECTION
+15V
T2 100K trimmer
OFFSET
R7 470K
R5 150Ω
R6 200Ω
SSM2044
SIG IN +
Q CONTROL
OUT
C4A
C4B
C3A
C3B
GND
+V
SIG IN-
C1A
FREQ CONTROL
C1B
C2A
C2B
-V
C9 820pF
C10 10nF
C11 10nF
C12 10nF
-15V
C3 .1uF
C4 .1uF
C5 .1uF
C6 .1uF
C7 .1uF
C8 .1uF
U1 TL071
U2 TL072
U3 TL072
C2 10uF
C1 10uF
L1
L2
JP1
RESONANCE SECTION
R16 47K 1%
R8 4K7 1%
P3 50K pot
RES
R10 47K 1%
R11 47K
SELF OSCILLATION
T1 20K
trimmer
R12 47K
U2a TL072
U2b TL072
RES CV jack (J3)
R9 47K 1%
OUTPUT SECTION
C15 15pF
R14 47K
OUT jack (J4)
R13 1K
U3a TL072
CONTROL SECTION
P4 50K pot
FM 1
FM 1 jack (J5)
R19 75K 1%
T3 1V/OCT ADJUSTMENT
50K
trimmer
R18 300K
P5 50K pot
FM 2
FM 2 jack (J6)
R20 75K 1%
R17 150K
U3b TL072
R15 1K
tempco
R16 470K
50K
T3 trimmer
FREQ OFFSET ADJUST
R22 47K
R21 100K 1%
P6 50K pot
FREQ
R23 47K